M83513/33-H02CW MIL-DTL-83513 Connectors

Mil-Spec MICRO-D CONNECTOR

General Specifications

Shell And Contact Style:	M83513/33 - Condensed Straight Socket Connector

Photographs are for illustrative purposes only.
Actual configuration and finish may be different

MIL-SPEC

Rear View

Front View

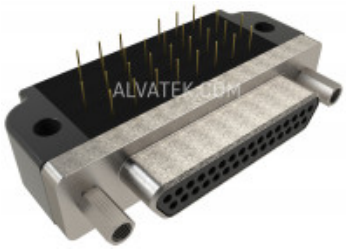

PCB Mounted Compact 90-Degree Angle Left View

PCB Mounted Compact 90-Degree Side View

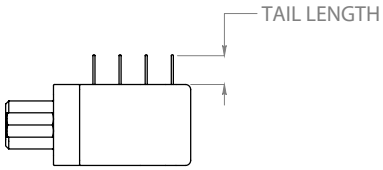

PCB Mounted Compact 90-Degree Top View

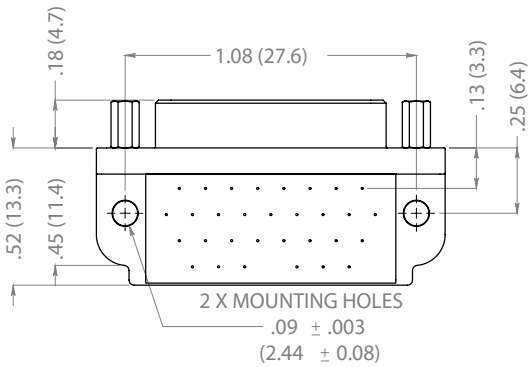
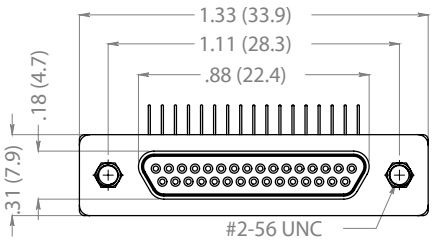
PCB Mounted Compact 90-Degree End View