MS/Standard
MS3452
box mounting receptacle

Receptacle Shell, Flange Box Mount, Threaded Coupling

Military No. MS3452
Amphenol/Matrix No. 9442

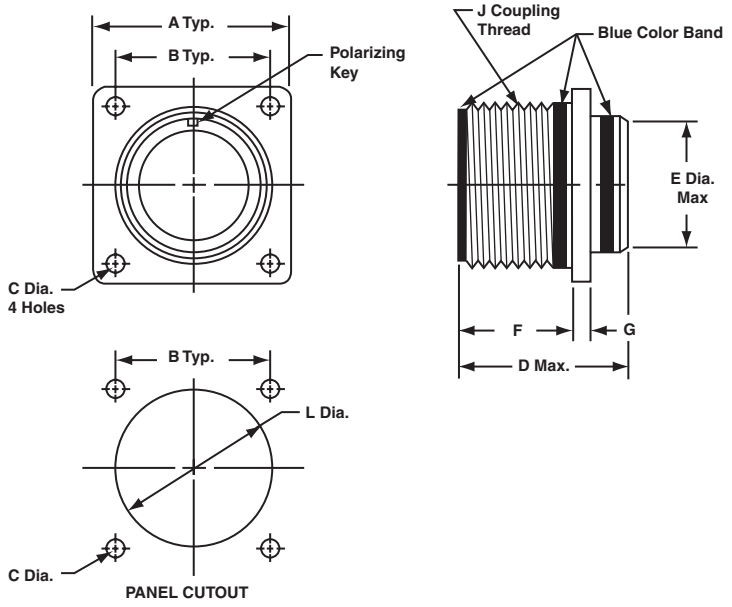

To complete order number see how to order, page 29.

Shell Size*	A ±.031	B	C Dia.	D Max. Size 16 & 12 Contacts	D Max. Size 8, 4, 0 Contacts	E Dia. ±.016	F	G ±.015	J Thread Class 2A	L Dia. ±.010
8S	.875	.594	.130/.115	1.662	–	.500	.578/.562	.083	.5000-28 UNEF	.562
10S	1.000	.719	.130/.115	1.662	–	.625	.578/.562	.083	.6250-24 UNEF	.688
10SL	1.000	.719	.130/.115	1.662	–	.625	.578/.562	.083	.6250-24 UNEF	.688
12	1.094	.812	.130/.115	1.662	–	.750	.765/.750	.083	.7500-20 UNEF	.812
12S	1.094	.812	.130/.115	1.662	–	.750	.578/.562	.083	.7500-20 UNEF	.812
14	1.188	.906	.130/.115	1.662	–	.875	.765/.750	.083	.8750-20 UNEF	.938
14S	1.188	.906	.130/.115	1.662	–	.875	.577/.562	.083	.8750-20 UNEF	.938
16	1.281	.969	.130/.115	1.662	1.937	1.000	.765/.750	.083	1.0000-20 UNEF	1.062
16S	1.281	.969	.130/.115	1.662	–	1.000	.577/.562	.083	1.0000-20 UNEF	1.062
18	1.375	1.062	.130/.115	1.662	1.937	1.062	.765/.750	.125	1.1250-18 UNEF	1.188
20	1.500	1.156	.130/.115	1.662	1.937	1.187	.765/.750	.125	1.2500-18 UNEF	1.312
22	1.625	1.250	.130/.115	1.662	1.937	1.312	.765/.750	.125	1.3750-18 UNEF	1.438
24	1.750	1.375	.157/.142	1.662	1.937	1.437	.827/.812	.125	1.5000-18 UNEF	1.562
28	2.000	1.562	.157/.142	1.662	1.937	1.750	.827/.812	.125	1.7500-18 UNS	1.812
32	2.250	1.750	.183/.168	1.662	1.937	2.000	.988/.875	.125	2.0000-18 UNS	2.062
36	2.500	1.938	.183/.168	1.662	1.937	2.250	.988/.875	.125	2.2500-16 UN	2.312
40	2.750	2.188	.183/.168	1.662	1.937	2.500	.988/.875	.125	2.5000-16 UN	2.562

* Consult Amphenol, Sidney, NY for availability of shell sizes 44 and 48.